Data Sheet

Article number: 2301078732R
Description: E+G Handwheel
VRTP.160+IR-A16

Measures

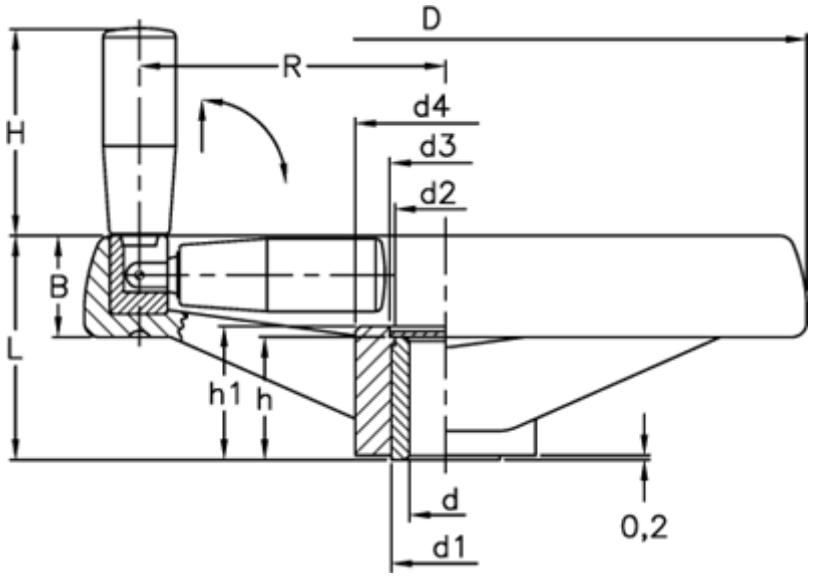

B	= 25	H	= 65
C (N m)	= 185	h	= 27
D	= 160	h1	= 29
d1	= 26	L	= 51
d2	= 24	L (J)	= 15
d3	= 25	R	= 65
d4	= 40		
d H7	= 16		

Product drawings and brochures of any kind may contain errors for which Brd. Klee A/S cannot be liable.